Desk Plans

Traditional to Contemporary

This reproduction of a Harvard classic was inspired by some good old-fashioned competition.

Part of the job requirement of being a self-employed custom woodworker is self-promotion. Word of mouth works well, but starting the word can sometimes be a challenge. That's where competitions come into play. There are a number of woodworking shows every year throughout the country where I set up my booth and sell my wares. Many of them also have some type of woodworking competition. The competition can be organized so woodworkers compete in a certain category (professional, amateur, intarsia, turning). But it was a slightly different competition that brought me to the table pictured here. It's called a "side-by-side," and the idea is that an original piece, usually an antique of some note or reputation, is chosen by the event's organizers, and the competitors build a reproduction to mimic the piece.

The table shown is attributed to the Shaker community at Harvard, Mass., and is believed to have been used as a work table, side table or writing desk. The table is a wee bit wobbly, and the drawer may have been added at a later time. On the original, the drawer is maple, while the rest of the table is cherry. My desk is also cherry and maple, but the finish is done so it's hardly obvious.

As mentioned above, the reproduction (like the original) is a little unsteady. My recommendation for your piece is to make the stretcher between the legs considerably wider (6" or more), perhaps even cutting a decorative arch in the stretcher to lighten the look. Depending on how you plan to use the table, you may want to take that into account.

The Wood

This is a fairly simple table with some basic mortise-and-tenon construction, so contrary to Shaker philosophy I wanted to adorn the heck out of this thing with some amazing flame cherry. Quite honestly, I'm not allowed to tell you where I got it, and I don't know if I'll ever get any like this again. Suffice it to say you should look for some nicely figured cherry, then follow the cutting list to rough the material to the sizes given.

The Joints

The legs are made from three boards that are joined together with mortise-and-tenon joints and then shaped. It's easier

shaker trestle d

by Glen Huey

Glen Huey builds custom furniture in his shop in Middletown, Ohio, for Malcolm L. Huey & Sons and is a contributing editor for Popular Woodworking. *See his work at www.hueyfurniture.com*

Photo by Al Parrish

esk

After drilling out the mortises in the feet using my drill press, I cleaned up the mortise and squared the corners with a chisel. I'm glad they shot this picture because I don't use hand tools too often.

With the mortise-and-tenon joints complete, I transferred the shape of the legs from the template to the pieces. Band saw the shape, then sand the edges smooth. You might note that the grain orientation on the feet isn't really the best, as it makes a weak support. But when making a reproduction....

to make the mortises in a square piece of wood, so I cut the mortises on the feet and top cross braces before shaping them. I used my drill press to cut the 3/8" x 2" x 1 1/8"-deep mortise on the feet because the 7 3/8"-wide board wouldn't fit in my bench-top mortiser. However, my mortiser worked fine for the 3/8" x 2" through-mortises in the top braces.

Cut the tenons on the leg pieces (which go between the feet and top cross braces) on the table saw. First define the shoulder of the tenon by setting the rip fence for the tenon length and set your blade height for 1/4". Cut the shoulders on the two wide sides of the legs using the miter gauge, then raise your blade height to 13/16" and define the shoulders on the two edges. Reset the fence for the length of the other tenon and repeat the process.

SHAKER TRESTLE TABLE

No.	Let.	Item	Dimensions T W L	Wood	Notes*
1	A	Top	9/16" x 17 1/2" x 29"	C	
2	B	Legs	7/8" x 3 5/8" x 20 1/8"	C	TBE
2	C	Feet	7/8" x 7 3/8" x 16 1/4"	C	
2	D	Top cross braces	7/8" x 1 5/8" x 16 7/8"	C	
1	E	Stretcher	1" x 1 5/8" x 28 3/4"	C	
2	F	Drawer runners	1/4" x 7/16" x 7"	P	
1	G	Drawer front	7/16" x 2 1/4" x 21 3/4"	M	
2	H	Drawer sides	7/16" x 2 1/4" x 7 1/8"	P	
1	I	Drawer back	7/16" x 1 3/4" x 21 3/4"	P	
1	J	Drawer bottom**	1/4" x 7 1/8" x 21 1/8"	P	

*TBE=tenons both ends; C=cherry, M=maple, P=poplar
** chamfer edges to fit in groove

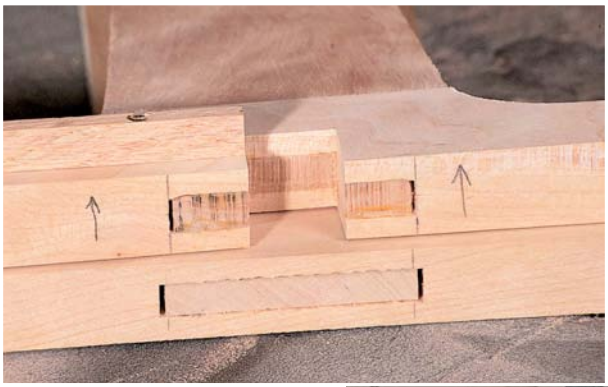

*The legs and stretcher are held together with an edge-lap joint. The legs are notched through the mortise-and-tenon joint **(above)**, and a mating notch is cut in the stretcher **(right)**.*

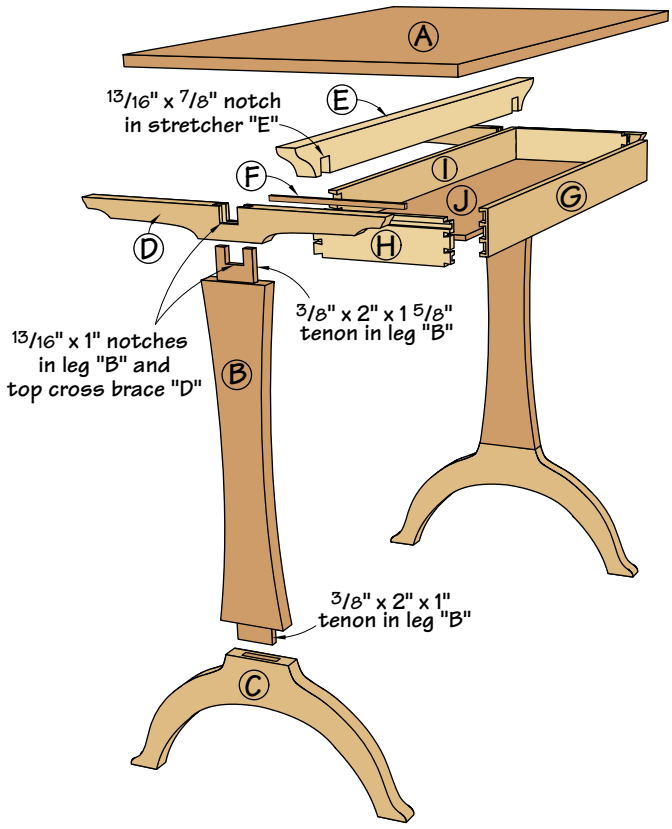

The edge lap joint isn't the strongest in the world, so I decided to add a screw to help out a little bit.

Now set your table saw fence to 5/8", set the blade height to match the lengths of the tenon and run the leg upright to define the cheeks. Set the fence for 2 13/16" and cut the other cheeks. Check the fit on your joints and make any necessary adjustments.

Shaping the Legs

With the leg pieces dry-assembled, transfer the leg shape from the scaled template on the next page to the legs. Then use your band saw to cut the legs to shape and sand the edges. I've found an oscillating spindle sander works well for this task, but if you can't spend the money, a drum sander attachment for your drill press is an economical option.

Glue up the legs, and while the glue is drying, cut out the stretcher. The stretcher fits over the legs using an edge lap joint, interlocking the legs and the stretcher. Cut two 7/8"-wide x 13/16" notches, 2 3/8" in from either end of the stretcher. The band saw works fairly well for this, with a little chisel clean up. When the glue is dry, cut the duplicate notches in the cen-

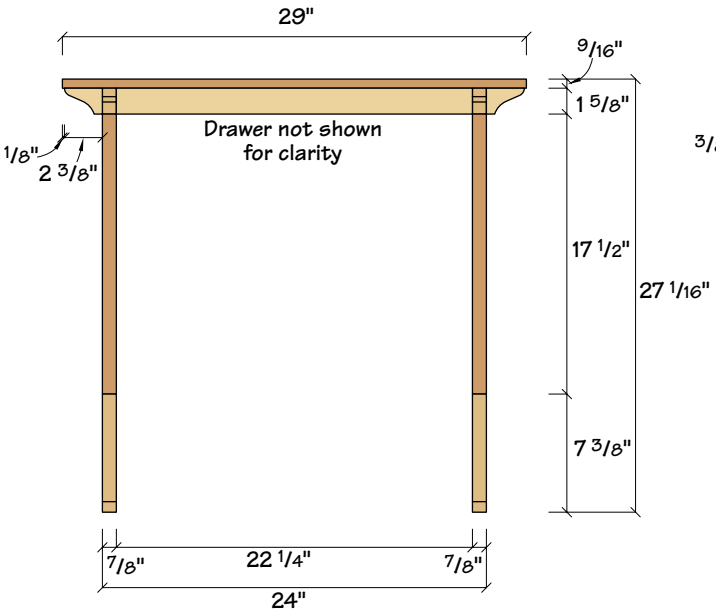

Elevation

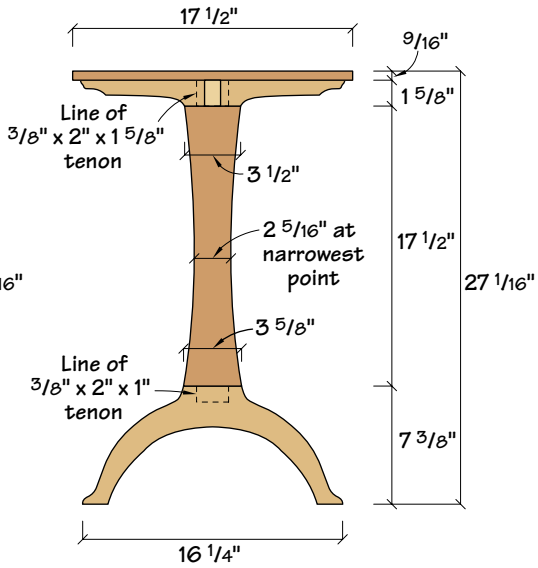

Profile

When attaching the top to the leg assembly, use elongated holes drilled in the cross braces to allow for wood movement due to changes in humidity.

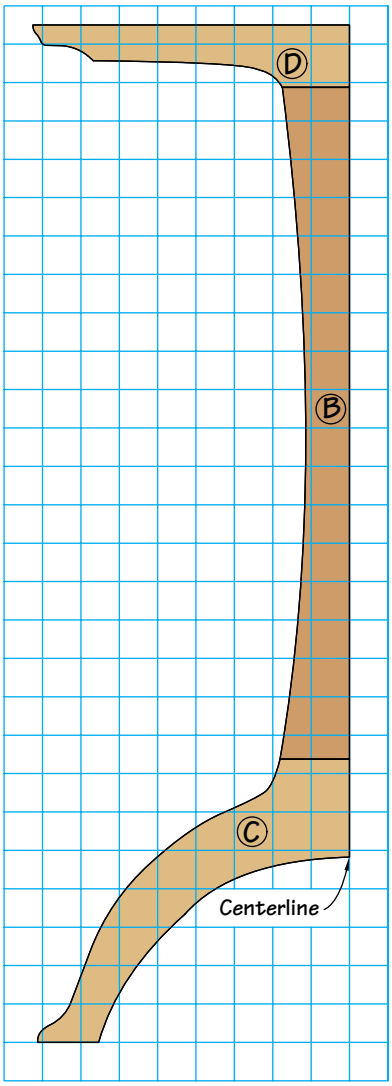

Scale: 1 square = 1"

ter of the cross braces, cutting into the through-tenon on the leg. Check the fit and make any necessary adjustment. When the fit is good, add a screw to the joints to make it a little stronger.

A groove in the top edge of the drawer sides slips over the drawer runners that are attached to the ends for a simple, but very efficient, drawer slide.

Make the Drawer

The drawer is made with traditional dovetail joinery. I used hand-cut half-blind dovetails on the drawer front and sides, and through-dovetails on the back. The drawer bottom fits into a 1/8"-deep x 3/16" groove in the sides and back, held up 3/16" from the bottom of the sides. Another 3/16"- deep x 1/4"-wide groove is cut on the outside of the drawer sides, 3/16" down from the top edge to serve as part of the drawer runner.

Attaching the Legs and Drawer

The drawer is hung on the legs using two drawer runners screwed to the inside of each leg. Adjust the location of the runners to allow the drawer to slide freely. Conveniently, this table design allows you to adjust the drawer's fit before the top is attached. Use screws and elongated holes drilled in the top cross braces to attach the top to the legs.

After everything fits well, remove the top and sand all the pieces in preparation for finishing. I used a water-base aniline dye (Moser's Dark Antique Cherry, Woodworker's Supply, 800-645-9292) to color the piece. I then followed the dye with a ragged-on coat of boiled linseed oil, a coat of clear shellac to seal the oil and then a final top coat of clear lacquer.

You may not be looking to drum up word of mouth about your woodworking to help your business, by I guarantee this piece will stir up word of mouth about your skills among your friends and family. **PW**

Writing letters longhand is one of life's simple pleasures, as is building this traditional lap desk.

Portable Writing Desk

The portable writing desk was an integral part of 18th and 19th century life, when writing was the only form of long-distance communication. As people spread across the globe in the 19th century, correspondence by mail became much more popular, and so did the writing desk.

The portable desks needed to be sturdy and lightweight, hold stationery and writing utensils, and have a place for people to write easily. The desk seen here will do all of the above, plus hold paper clips, rubber bands and more in the simple side drawer.

While you might not abandon your laptop computer for this more traditional item, it is an excellent place to write holiday cards, thank-you notes and personal correspondence. Though we all like the immediacy of e-mail, a hand-written letter always is a welcome surprise.

by David Thiel

Comments or questions? Contact David at 513-531-2690 ext. 1255 or david.thiel@fwpubs.com.

Rabbets are the Key

Construction of this project is simple, but the joints are still sturdy. All the pieces are made from ⅜"-thick cherry, and the primary joinery is an interlocking 3⁄16" x 3⁄16" rabbet joint that can be cut on all the pieces at one time with a standard table saw blade. A band saw (or jigsaw) handles most of the project's angles, and a hand plane finishes things up.

This is a good first project for the novice woodworker, or a pleasant weekend project for the accomplished craftsman.

Photos by Al Parrish

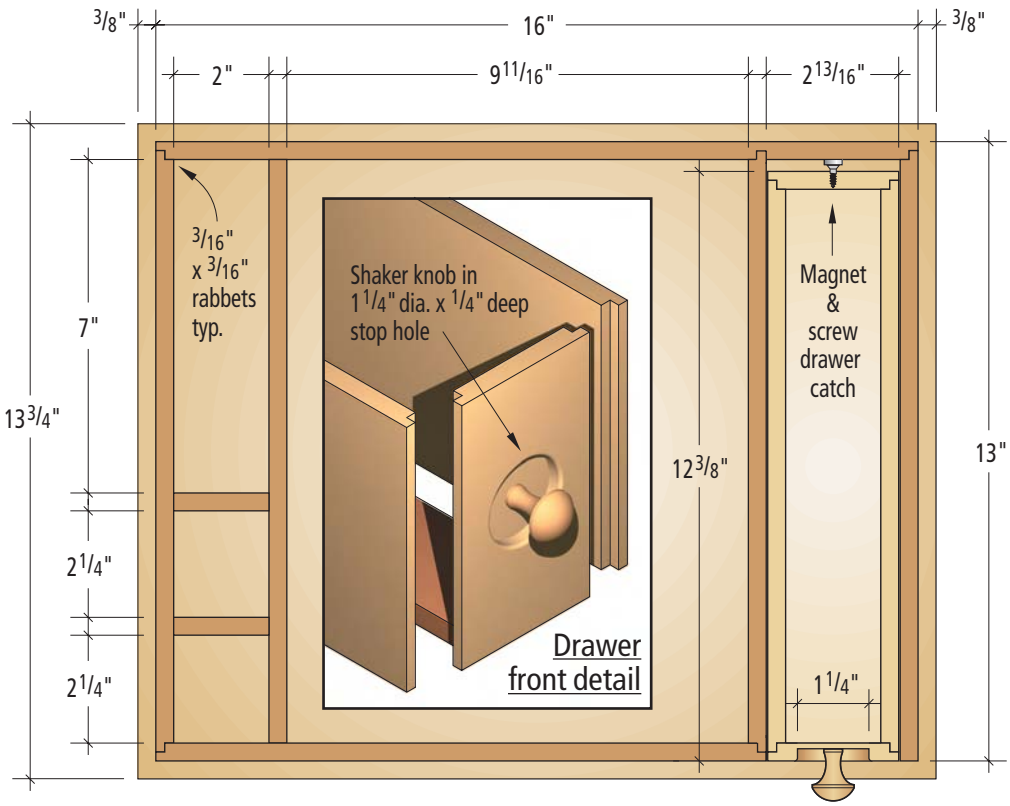

Plan - top & lid removed

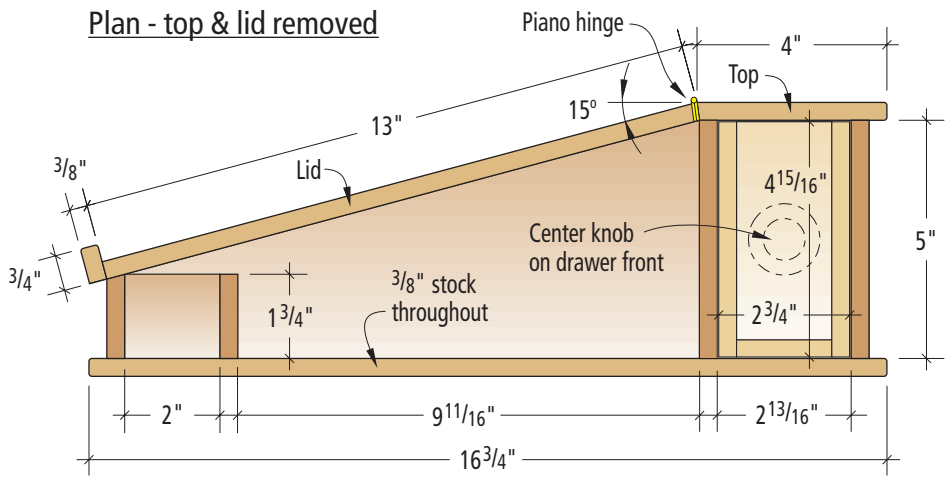

Section

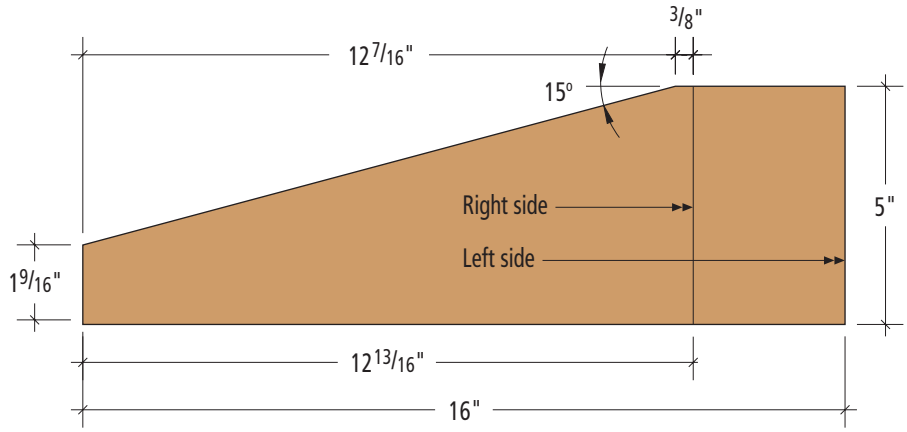

Sides

From Thick to Thin

If you own a band saw, the material for this project can be gleaned from a fairly small amount of wood. About 8 to 10 board feet will do. A nice piece of 6/4 (1½"-thick in the rough) cherry can be resawn easily to yield the necessary ⅜" thickness and ensure a nice bookmatched lid.

"Resawing" is taking a thicker piece of wood and splitting it to make two thinner pieces. The band saw is the machine of choice for this process.

"Bookmatching" is when a resawn piece of wood is spread open like a book, exposing the two nearly matching inner surfaces. Choose your wood carefully, looking for consistent color throughout the piece. Cherry can have sappy areas that are lighter in color.

When you get the wood to your shop, flatten one face and square one edge on your jointer to give you a flat, square surface to run along your band saw's fence during resawing. You may want to cut the lumber to shorter lengths (a few inches longer than necessary for each piece) to make flattening easier.

It's likely that your rough lumber will allow you more than ⅜" thickness after resawing. Half-inch stock or more is preferable

SUPPLIES

Rockler
800-279-4441 or rockler.com

1 • ⅞" cherry Shaker knob, #78493, $2.59/pair

1 • rare earth magnet, #32907, $3.99/pack of 10

Lee Valley
800-871-8158 or leevalley.com

1 • brass piano hinge, #00D50.09, $4.40

Prices as of publication deadline.

Mark each of the pieces as either inside or outside, as well as the ends that will need rabbet cuts, to avoid making mistakes once you're at the machine.

because no matter how careful you are, cutting a perfect 3/8"-thick piece of wood is unlikely.

There's one other thing to be aware of with thin wood. After resawing, you should allow the pieces to sit for a day or so to acclimate to the humidity levels in your shop before planing them to finished thickness. There's a chance the thinner boards will cup or twist, and you should let that happen before you run them down to 3/8" thick on the planer.

Once the wood is planed to the proper thickness, join the edges and glue up the panels for the bottom and the lid. Your bottom piece may require three pieces, so match the grain for the least visible joint. All the other pieces shouldn't require glue-up.

While the glue is drying, cut the two sides, front, back and drawer sides to size. Don't worry about the angled cuts on the sides at this point; we'll get to that later.

Decide which faces are the most attractive on all the parts mentioned above and mark the opposite faces as the inside. All but one of the ends of these parts (the right end of the back piece) will get rabbet cuts, so mark them to avoid confusion. The center partition also will receive rabbets on both ends, so make the appropriate marks on that piece.

Simple Rabbets

Next, head to your table saw with your marked pieces. All the rabbets for this project are the same size, 3/16" x 3/16". You can use a router table to make these, or it's a fairly simple task on your table saw. I used a standard combination blade to make them. This works fine, but the angled teeth of the blade can leave a ridged surface on the rabbet cheek, causing a poor fit. But that's a pretty easy problem to avoid.

First set the blade height for 3/16", measuring to the point of one of the angled teeth, not one of the flat teeth. You want to measure to the maximum depth of the cut. Then set the rip fence 3/16" from the left edge of the blade. It will likely take two passes to cut the entire 3/16" rabbet.

Guide a test piece through the blade using your miter gauge. Make sure it's set up at an exact 90° angle to the blade. Push the piece snug against the rip fence (inside face down on the saw table) and make your first cut.

Before you bring the miter gauge back, slide the piece to the left and out of the way of the blade. Bring the miter gauge back and then push the piece to the right, toward the fence, stopping with the piece slightly away from the fence and make another pass. This should remove the rest of the waste material from the rabbet, as seen in the two photos below.

If you look at the rabbet now, you'll see the ridges I mentioned. You could take a shoulder plane and smooth that surface, but it's just as easy to make a couple more passes over the blade, varying the location to nibble away the ridges.

Once you have it the way you like it, you can cut the rabbets on the marked ends of the desk pieces and the four drawer parts.

Before you change the saw's settings, there is one more cut to make. On the inside surface of

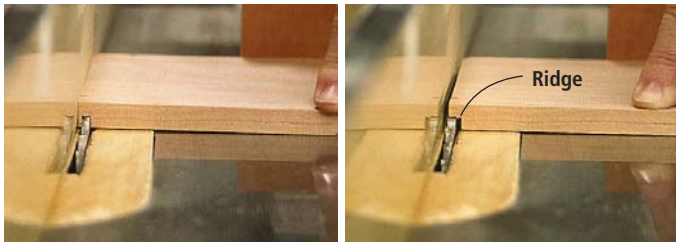

Cut rabbets in multiple passes on the saw. The first pass, with the piece pushed against the fence, defines the shoulder of the rabbet (left). The second pass, with the piece moved away from the fence, clears the rest of the waste. A combination blade will leave ridges in the rabbet; a few more passes over the blade will remove those.

PORTABLE WRITING DESK

	NO.	ITEM	DIMENSIONS (INCHES) T	W	L	COMMENTS
❑	1	Top	3/8	4	13 3/4	
❑	1	Lid	3/8	13	13 3/4	
❑	1	Bottom	3/8	16 3/4	13 3/4	
❑	1	Left side	3/8	5	16	3/16" x 3/16" rabbet BE
❑	1	Right side	3/8	5	12 13/16	3/16" x 3/16" rabbet BE
❑	1	Back	3/8	5	12 13/16	3/16" x 3/16" rabbet OE
❑	1	Front	3/8	1 3/4	12 5/8	3/16" x 3/16" rabbet BE
❑	1	Back divider	3/8	5	12 5/8	3/16" x 3/16" rabbet BE
❑	1	Front divider	3/8	1 3/4	12 1/4	
❑	2	Interior dividers	3/8	1 3/4	2	
❑	1	Lid lip	3/8	3/4	13 3/4	
❑	2	Drawer sides	3/8	5	12	3/16" x 3/16" rabbet BE
❑	2	Drawer front and back	3/8	5	2	3/16" x 3/16" rabbet BE
❑	1	Drawer bottom	3/8	2	11 5/8	
❑	1	Drawer knob	3/4 dia. x 5/8 length			

BE = both ends, OE = one end

the left side, you need to make a dado to fit the 3/16"-thick tongue on the center partition. Carefully mark the location of the dado using the right side piece and the illustrations on page 72. Then use the miter gauge and cut between your marks.

The Correct Angle

You're now ready to cut the angle on the two sides. Use the illustrations to locate the beginning and ending points of the angles, and connect the points to define the angle. Use your band saw or jigsaw and cut both pieces, but cut wide of the line to leave room to clean up the saw marks.

I've found the easiest way to make the angles perfectly (and equal on both pieces) is to clamp the two pieces together and use a plane to smooth the two edges. Take your time and keep the plane perpendicular to the pieces.

With the sides angled, clamp the front piece and the center partition between the sides without glue, as shown below. The top edge of the front will stick up above the sides. Make sure the bottom edges are flush, then mark the angle of the sides on the front piece on both sides.

Unclamp the box and connect the angled marks on both ends of the front piece on the front and back faces. This is your next task with a plane. Shave away the material, checking the angle as you go, until you have matched the bevel to the sides.

Before you can put the box together, sand the pieces inside and out with #100-, #150- and #220-grit sandpaper.

Ready to Glue

You're now ready to assemble the box. This can be a little tricky. The main box is simple enough, with the front, center divider and two sides making a simple frame. Test the joints to make sure they are tight, then go ahead and glue up those four pieces. Make sure the bottom edges of each piece are all flush. Also, check to make sure the frame is close to square after you apply clamp pressure.

While the glue in the other corners is drying or after the clamps are off, glue the back in place to the left side. Because this is attached at only one end, take care to clamp it squarely to the side.

After carefully laying out the angle locations on both sides, use the band saw and cut about 1/16"-wide of the line to allow for accurate trimming.

To clean up the band saw cuts and ensure they're identical, clamp the two sides together and use a bench plane to clean them up simultaneously.

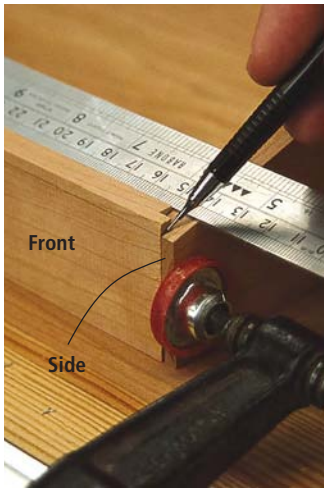

With the front piece clamped between the sides (without glue) transfer the angle from the side to the front piece. Do the same on both ends, then use a straightedge or rule to connect the lines on the front and back. This defines the waste that needs to be removed. A block plane makes quick work of this angle.

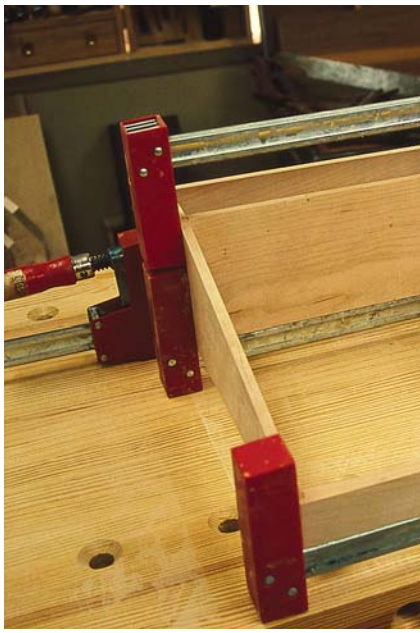

After the glue is dry, carefully turn the desk over and glue the top (not the lid) in place. Allow the top to overhang the sides and back by 3/8". The front edge of the top will extend slightly past the divider. Make sure that distance is the same on both sides.

The inside dividers are next. The three pieces simply are glued in place with butt joints. Cut the pieces to fit, marking their locations, then glue them in place. The spacing shown in the illustrations leaves plenty of room for pens and smaller items.

The Lid and the Bottom

The lid is pretty simple, but there are two things to do before adding the hinge. The first is to add the lip to the front of the lid. Before gluing the lip on, use a small (1/8"-radius) roundover bit in your router to shape the top edges of the lid sides, the back edge and sides of the top piece, and all four edges of the bottom. Then sand the lip and lid, and glue it in place, flushing the bottom edges of both.

Second, with the lip in place, the back edge of the lid needs to be beveled to match the square edge of the top. Lay the lid on the angled surfaces of the desk and carry the angle over to the lid. Make marks on both sides and

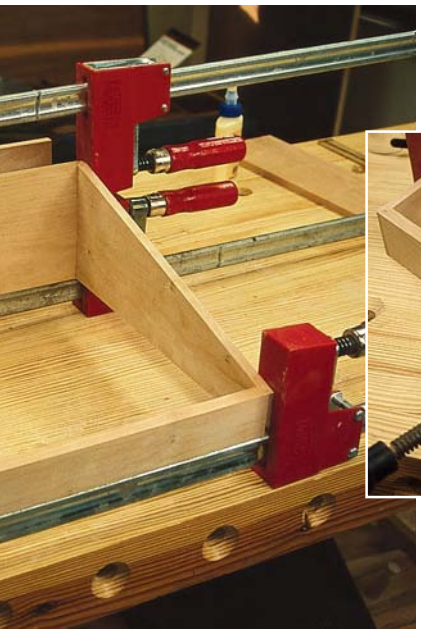

After a dry run, you're ready to add glue. Secure the front and divider between the sides, then glue the back to the left side (left). Next, glue the top in place on the back and divider, leaving 3/8" overhang at the back and two sides. After that's dry, glue the interior dividers in place.

Bevel the lid to match the angle formed by the sides and the front edge of the top. Lay the lid in place and transfer the angle to the lid from the top using a ruler. Then use your block plane to bevel the edge.

Because wood moves with changes in humidity, the bottom needs to expand from front to back without breaking the box. This is solved by screwing the bottom to the box through elongated screw holes.

use your block plane to cut the angle as you did with the front.

The bottom is held in place with screws and no glue. Because of the bottom's grain direction, the piece will expand and contract front-to-back with changes in humidity. If the bottom is glued in place, this could tear apart the desk, because the frame above won't move in the same direction.

To avoid this, drill elongated holes for the screws using your drill press. Three overlapping holes should be sufficient. Then countersink the holes and attach the bottom, predrilling the holes to avoid splitting the sides.

The lid is held in place with a simple brass continuous hinge. Predrill the holes in the top and lid to avoid splitting.

Adding the Drawer

With the desk complete, the last step is making and fitting the drawer. The four sides should have already been cut and rabbeted, so it's a simple assembly.

Before gluing, check the drawer fit by putting the sides between the front and back, and test the drawer in the desk. The drawer should slide with a little room to spare. If it's too wide you can reduce the width on the front and back until you have a good fit.

I added a simple Shaker knob to the drawer, but I didn't want it to stick out too far from the side of the box. So I cut a 1¼"-diameter recess ¼" deep in the drawer front. A Forstner bit in my drill press made this a simple task.

The knob actually came with a tenon, but because this drawer will hold lightweight objects I trimmed the tenon off and simply glued the knob in the recess.

You're now ready to glue the drawer together with the bottom captured between the four sides.

You may have noticed that the depth of the drawer is shorter than the space available. I wanted to make sure the drawer front ended flush with the desk sides when closed, and I also wanted the drawer to stay closed while the desk was being carried. A magnet and a screw solved both problems.

I installed a #6 steel flathead screw to the center of the drawer back, then attached a rare earth magnet (lots of strength in a very small package) to the screw.

I put a dab of cyanoacrylate glue on the magnet and pushed the drawer in place in the desk. After the glue has set, you can pull the drawer out (leaving the magnet in place) and adjust the screw depth until the drawer is flush to the side.

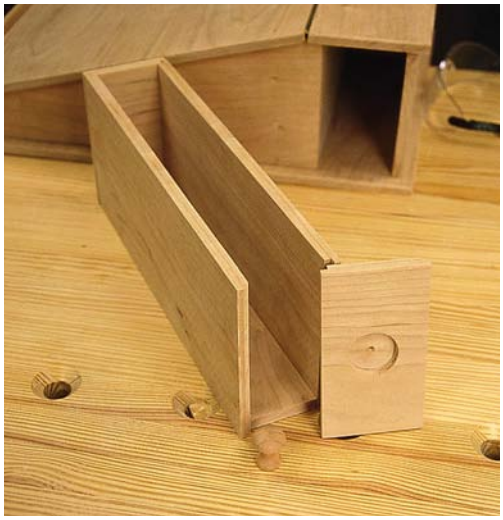

Make the drawer using the same rabbet joints as the desk. The two sides fit between the front and back, while the bottom is glued in place between the four pieces.

A Simple Finish

Cherry is a great wood to work with because it can be left natural and it's rich color will slowly intensify to a deeper red over time. If you're impatient, you can go ahead and add a stain to hurry the process, but I recommend letting time do its job.

In fact, sunlight hastens the process. If you set the completed box so it gets reasonably even sunlight for a couple of days, you'll see the color deepen pretty quickly.

A clear finish is still a good idea. I used a couple of coats of linseed oil, allowing each coat to dry fully, sanding lightly with #220-grit paper between coats. Wax would be another good option, or you simply could use a spray lacquer finish to protect the piece.

The last bit of work is to add a simple catch to hold the lid closed. I used a simple friction catch, but you may want to add a lock to keep things secure as well as in place.

You're now ready to take your correspondence on the road ... or maybe just as far as your back yard underneath a tree. **PW**

Knockdown Computer Desk

BY HUNTER LANG

Ladders form the base of this knockdown desk — simple steps to a higher education in woodworking.

I'm in the midst of preparing for college, so I need a desk that is functional but also portable, so that I can easily move it into my dorm room when the time comes. The desk that I've had since I was nine years old is too small and about to fall apart. It wouldn't be worth it to take it to school with me. So I decided to build a new one.

This new desk was designed with a large top to hold a computer monitor and still have enough space for book work. It was also designed to be easily taken apart and put back together. Slots in the rails of the shelves fit on top of the rungs of the ladders with a few screws for added stability. This design would be ideal for any college student, and meets my needs perfectly.

Easy to build, easy to move. *This contemporary computer desk is built with simple joinery and is designed to be assembled or disassembled in minutes.*

Take it for a spin. *Tenons are formed on the ends of the rungs by rotating a dowel over the router bit.*

I began building the desk by cutting $1\frac{1}{4}$"-diameter poplar dowels to $20\frac{1}{4}$" to be used as connectors for the ladders. Then I made tenons on each end at the router table, with a $\frac{1}{2}$"-diameter straight bit with $\frac{1}{8}$" of the cutter exposed above the table. To keep each dowel centered over the cutter, I clamped blocks on each side of the bit and set the fence on the router table back from the front edge of the cutter by $\frac{7}{8}$".

I moved each dowel into the cutter and rotated it with my right hand as I held it down with my left. As the cuts were made I moved the dowel toward the fence until I had made a complete rotation with the end of the dowel against the fence. This gave me a tenon on the end with a 1" diameter – that's long enough to go through the legs of the ladders.

Holes in a row. *Careful layout and setup of the holes in the legs makes for easy assembly and sturdy construction.*

After preparing the tenons, I cut the angled leg pieces to length and laid out centers for holes according to the drawing on page 60. I grouped the legs in pairs and marked off the locations for the holes and the angles on the ends of the legs. Then I

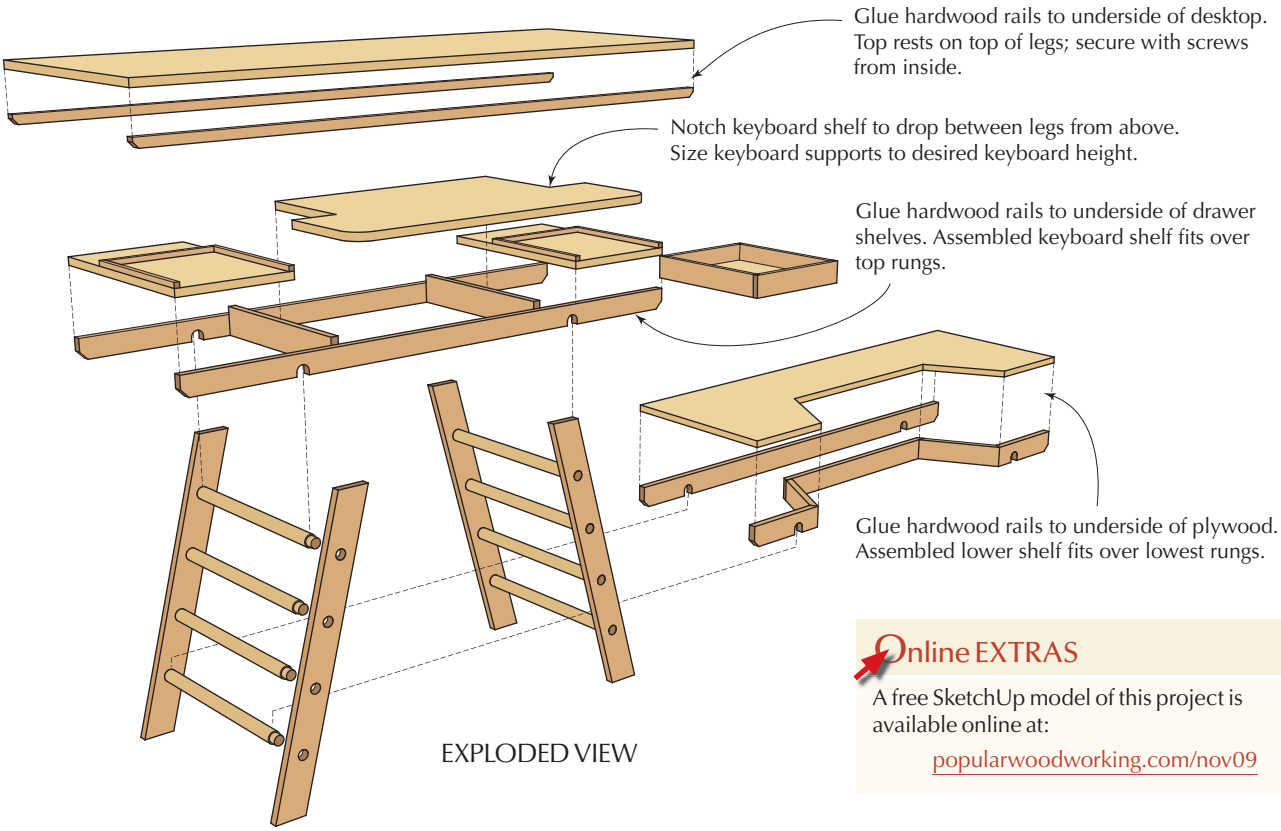

EXPLODED VIEW

Online EXTRAS

A free SketchUp model of this project is available online at:

popularwoodworking.com/nov09

LEAD PHOTO BY AL PARRISH; STEP PHOTOS AND ILLUSTRATIONS BY ROBERT W. LANG

drilled the holes with a Forstner bit at the drill press, using the fence to center the holes in the legs.

Little Things Mean a Lot

The next step was to make a kerf across the grain in each tenon with the band saw. I set the fence to keep them centered, and I stopped cutting just before reaching the shoulders of the tenons.

Next, I made wedges to put into the tenon kerfs. These wedges strengthen the bond between the dowels and the legs after the joints are put together. To do this, I angled the miter gauge to 3° and sliced wedges from a wide, 1"-long cutoff of scrap. I flipped the piece after every cut to form the wedges. To keep the pieces of wood from falling through the insert in the band saw table, I put packing tape over it.

Now I was ready to put the tenons into the holes of the leg pieces. I started by brushing glue around the inside of the holes. Then I inserted the tenons and clamped the legs and rungs together. I put glue on the wedges and drove them into the slots in the tenons to hold the pieces together. I let the glue dry overnight then trimmed the protruding tenons and wedges with a flush-cut saw, and cleaned up the wedges with a block plane.

One Piece of Plywood

With the leg units assembled, it was time to start building the shelves. All the plywood in the shelves came from one 5' x 5' piece of 3/4"-thick Baltic birch plywood. I ripped the plywood at the table saw. I made two rips at 18 1/2" for the bottom shelf and keyboard shelf, and I made the last rip at 22" wide for the top shelf.

I cut the bottom shelf to 54" long, cut the two end pieces for the drawer shelves to 11 5/16" long, and set the leftover pieces aside for the keyboard shelf. I laid out the

Across the grain. *A band sawn kerf is cut in the center of each tenon.*

Flipping for wedges. *The miter gauge is set at a slight angle, and the wedge stock is flipped over after each cut.*

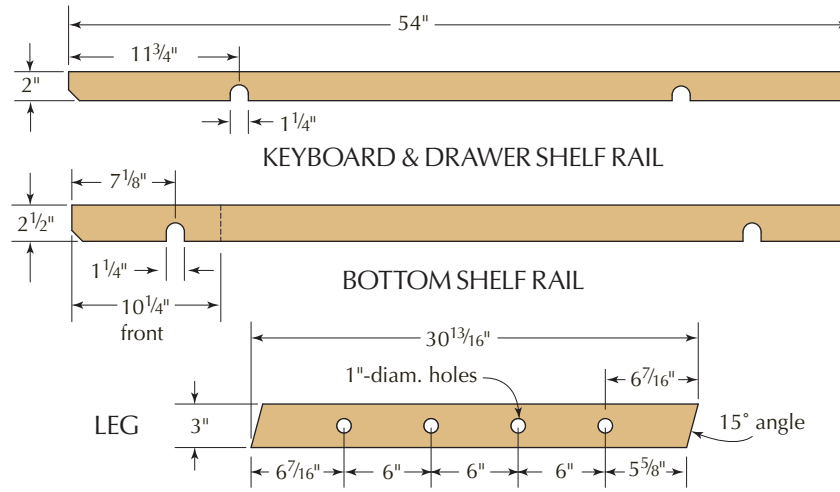

A reason to hide. *I used liquid hide glue to allow more time to assemble the rungs and legs.*

notches in the solid-wood rails that support the shelves and drilled 1¼"-diameter holes at these locations, with the top edges centered in the width of rails.

I used an adjustable square to draw lines tangent to the edges of the holes from the bottom edge of the rails. I used the band saw to cut from the edge of the rails to the holes to make notches, but you could easily use a jigsaw instead. Then I used a rasp to remove the saw marks at the notches and tested that they fit well enough to just slide over the rungs of the ladders.

The angled cutout area in the lower shelf provides legroom. To make it, I set my bevel gauge to 15° for the angle and went back from the front 9". With a jigsaw, I carefully cut outside the lines that I had marked. Then I cut the rails to match the bottom front and back edges of the shelf.

I mitered the ends of the rails at the front corner of the cutout in the bottom shelf. The last piece below the bottom shelf, the foot rail, is just butted against the ends of the angled pieces.

Starting at the Bottom

I started assembly with the bottom shelf, and worked my way upward. No fasteners were necessary. I just used glue, lots of clamps and a strip of clear packing tape across the mitered corners. After the glue dried overnight, I used a trim router with a flush-cutting bit to trim the roughly cut plywood to the straight edge of the solid wood rails.

I put the shelves onto the ladders and clamped them into place. I then attached the shelves to the ladders with #8 x 1¼" screws from the inside of the rails into the legs of the ladder units. These screws don't show when the desk is assembled, and they keep the shelves from pivoting on the rungs.

I wasn't sure how tall the keyboard tray should be. My original design had the keyboard tray on top of the rails of the first shelf below the top. I thought that this made the tray too low, so I decided to make it a little taller. So I cut two solid pieces of wood 2¾" wide to support the keyboard tray, cut them to length and attached them between the front and back rails of the top shelf with

A short drive home. *The wedges spread the ends of the tenons, making them tight in the mortises in the legs.*

A little off the top. *I made the tenons a little long, then trimmed them after assembly.*

New block for the kid. *A few passes with a block plane levels the ends of the tenons and wedges to the surface of the legs.*

Notches are the key. *The semi-circular openings in the bottom of the shelf rails line up all the parts and make assembly a snap.*

Glue is enough. *The connection between the plywood and solid wood is long-grain to long-grain, so a glue-only joint will be solid.*

pocket screws. I didn't use glue in case I decide to change the height later on.

You may also need to adjust the shelf heights to accommodate your computer case, if you want to put it on the bottom shelf. Check the clearance you will need before building. You can also leave the drawer off one side if you need the space. Replace the plywood shelf with solid wood rails between the two long rails, and that will give you a few more inches.

I used a square to locate the notches on the keyboard tray, and made sure to leave clearance so I could drop the tray straight down between the ends of the ladders. These notches allow for easy disassembly; just pull the tray straight up to take the desk apart.

After I cut the notches in the keyboard tray with a jigsaw and smoothed the edges with a rasp, I screwed it down to the rails. The space behind the tray leaves room for wires and cables. The top was simple; two straight pieces of solid wood were glued beneath the front and back edges of the plywood. The top rests on the top of the legs, and is secured with a screw from the inside of each leg into the desk's top supports.

Cutting Corners

I used the jigsaw to round off the sharp corners of the keyboard tray, then smoothed them with a rasp. Next, I used a 1/8" radius roundover bit in a trim router to ease the sharp edges on all the parts of the desk. Now it was time to sand everything. I used #120-grit with a random-orbit sander.

The drawers are simple boxes with rabbet-in-groove joints at the corners and a 1/4"-thick plywood bottom that slides into grooves in the drawer fronts and sides. To guide the drawers, I cut strips of solid wood 1/2" square. After the drawers were made, I set them on the shelf and nailed a strip on each side of the drawer to act as guides, plus one at the back of each as a stop.

After everything was assembled and sanded, I applied two coats of brushed-on satin water-based polyurethane. After the first coat, I sanded with #180-grit sandpaper to smooth out the finish.

The building process wasn't as difficult as I had expected. I had to work with many tools that I had never used before, but I took to the new challenges readily. The design of the desk is very functional, so all of the construction steps made sense.

After finishing the desk, I was very satisfied with my final product. I put hard work into building my desk, but it is going to meet all my needs for college. I have already taken it apart and put it back together a few times. It was a stress-free process each time, and I'm not apprehensive in the least bit about having to disassemble it and take it with me to college. I know that it will be a simple process, and it will probably be the easiest part of moving. **PW**

Hunter is a high school senior from Maineville, Ohio. In addition to woodworking, he runs cross-country, pole vaults and plays guitar. This is his second article for Popular Woodworking.

Quick assembly. *A few screws in concealed locations hold the pieces securely together.*

Cutting corners. *The angled cutout in the bottom shelf provides some legroom as well as out-of-the-way storage.*

Knockdown Computer Desk

	NO.	ITEM	DIMENSIONS (INCHES) T	W	L	MATERIAL	COMMENTS
❑	8	Rungs	1 1/4 dia.		20 1/4	Poplar	18 1/2" between tenons
❑	4	Legs	13/16	3	30 13/16	Oak	
❑	2	Desk top supports	13/16	7/8	60	Oak	
❑	2	Keyboard shelf rails	13/16	2	54	Oak	
❑	2	Keyboard tray rails	13/16	2 3/4	18 1/2	Oak	
❑	1	Bot. shelf back rail	13/16	2 1/2	54	Oak	
❑	2	Bot. shelf front rails	13/16	2 1/2	10 1/4	Oak	
❑	2	Bot. shelf angle rail	13/16	2 1/2	10	Oak	
❑	1	Bot. shelf foot rail	13/16	2 1/2	25 5/16	Oak	
❑	2	Drawer fronts	1/2	2	10 5/16	Oak	
❑	2	Drawer backs	1/2	1 1/2	9 13/16	Oak	
❑	4	Drawer sides	1/2	2	12 3/16	Oak	
❑	4	Drawer guides	1/2	1/2	12 11/16	Oak	
❑	2	Drawer stops	1/2	1/2	10 5/16	Oak	
❑	1	Desk top	3/4	20 1/8	60	Birch ply	
❑	1	Bottom shelf	3/4	18 1/2	54	Birch ply	
❑	2	Drawer shelves	3/4	18 1/2	11 5/16	Birch ply	
❑	1	Keyboard shelf	3/4	18 1/2	32 5/16	Birch ply	

greek key desk

Two simple tricks make cutting and gluing this desk a real snap.

This is an original design by Armand Sussman, an amateur furniture maker living in Pennsylvania. The design creates an illusion of wood twisting and turning. By using contrasting woods, an endless stripe is created, adding movement to this piece. The glass top serves as a work surface, but it doesn't obscure the base. The numerous lap joints (called "step-miters" by Mr. Sussman) have been worked into a novel Greek key design on the ends of the desk, which is built using cherry and walnut.

The desk is constructed by laminating strips of wood together. By making some of the layers shorter than others, you make the joints for attaching that lamination to another. As a result, all of the materials for this project must be machined precisely. Any variances will show up as gaps in the joints after final assembly.

Tricks to Dead-on Components

There are two tricks to make sure your pieces are all the right size and won't slide around when you glue them up. First, when cutting out the pieces for this desk, I found it easier to cut them grouped by letters, such as A1, A2, A3. A1 is the longest piece, A2 is 1½" shorter, and A3 is 3" shorter than A1. Because all of the desk's components are stepped like this, I came up with a quick way to make these

by Jim Stack

Jim Stack is acquisitions editor for Popular Woodworking *Books. This desk is one of 15 designs that will appear in the forthcoming book "Fast Furniture"* (Popular Woodworking *Books) which will be available in January 2001.*

Here I'm cutting the A2 piece with one of the spacers in place. To cut the A3 piece, use two of the spacer blocks.

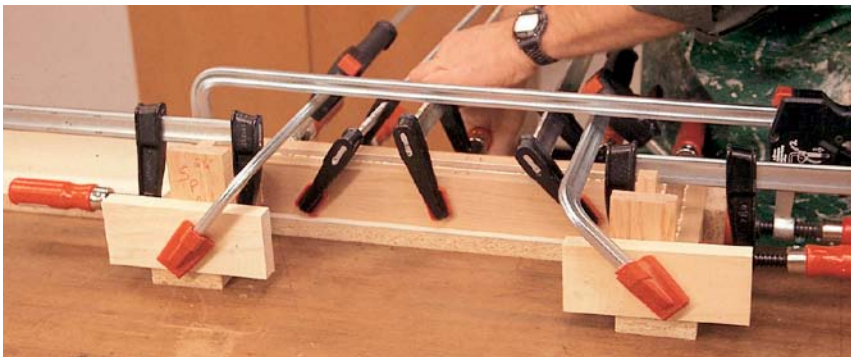

Here I'm clamping the E and D pieces together. Use spacers on the ends of the D parts to hold them in place against your gluing jig.

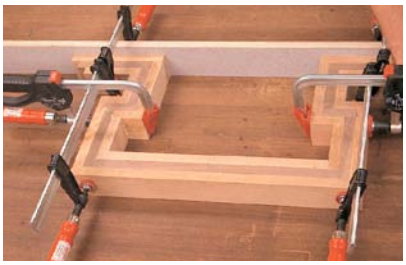

This is where your parts start to look like something. Joining the three assemblies creates the Greek key at the bottom of the base.

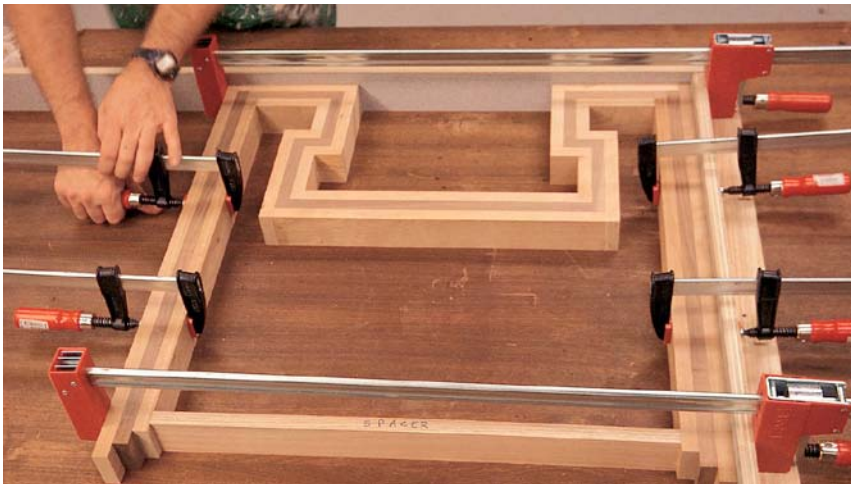

When assembling the legs to the Greek key, I used a spacer (seen at the bottom of the photo above) to keep the legs spaced properly while gluing-up.

The stop block clamped at the end of the glue-up jig keeps the F4 and F5 pieces level with the top of the G3 piece.

Start by gluing G1 in place, then work your way up. As you can see in the photo, I clamped the entire leg to my assembly bench to make things easier.

cuts. Cut the longest piece first using a stopblock on the fence of your table saw's sled or miter gauge. Then take two scrap pieces of ¾"-thick wood from the project and glue them together to form a 1½"-thick spacer. Hold this piece against the stop block to cut the second piece. Then make a second spacer using two more scraps and use both spacers to cut the third piece. This method makes the desk components perfectly sized. Cut out all your pieces, then get ready to glue them up.

To keep your pieces from sliding around during gluing, make a jig from two pieces of melamine-faced particleboard put together lengthwise at a right angle to create a straight fence. Then put a small piece of wood on the end of the jig to act as a stop. This gives you a square corner to work out of.

On to Assembly

Start by gluing the E pieces and two sets of the D pieces together to form a shallow "U." (When gluing these step-mitered joints, I found it best to use polyurethane glue. It provides a strong bond for this type of joint.) I dry-fit all the parts to be sure I would be able to get all the pieces to come together tightly. After applying the glue, clamp the length of the E pieces first. By using ¾" spacers at the ends of the D parts, applying even clamping pressure is easy on the lengths of the D parts. Make two of these assemblies.

The next assembly consists of the C, B and A parts. The glue-up of this assembly is done the same way as the E and D assembly. Make four of these assemblies.

Next glue one of the E and D assemblies and two of the ABC assemblies to-

gether to form the Greek key part of the end assembly. I had to clean the glue squeeze-out at the joints and pare the wood down in a couple places with a chisel to get a tight fit. If your pieces don't come together tightly, your joints will not be strong.

For the next assembly, put two glue-up jigs at a right angle. This makes the glue-up of the two legs (F) to the Greek key assembly easy to keep square.

Glue the F4 and F5 pieces to the tops of each leg. Use a stop block to keep the pieces even with the end of the F3 piece of each leg.

The G pieces attach the two end assemblies together. It is easier to control gluing and alignment of the G1 pieces if they are glued into place one at a time, starting at the bottom and working up.

Sanding and Finishing

I used a random orbital sander, going up to 150 grit sandpaper. Break all the sharp edges with a sanding block using 150 grit sandpaper. For a top coat, I applied three coats of a clear finish.

For the top I used a ½"-thick piece of 30" x 50" tempered glass polished on all edges. (To keep the glass in place, use six clear door bumpers applied to the top stretchers.) It wasn't until I completed this desk and had the glass top in place that I appreciated how striking it looked. **PW**

Schedule of Materials: Greek Key Desk

No.	Item	Dimensions T W L
4	A1	¾" x 2¼" x 7½"
4	A2 (*all)	¾" x 2¼" x 6"
4	A3	¾" x 2¼" x 4½"
4	B1	¾" x 2¼" x 5¼"
4	B2 (*all)	¾" x 2¼" x 3¾"
4	B3	¾" x 2¼" x 2¼'
12	C1 (*4)	¾" x 2¼" x 2¼"
4	D1	¾" x 2¼" x 6¾"
4	D2 (*all)	¾" x 2¼" x 5¼"
4	D3	¾" x 2¼" x 3¾"
2	E1	¾" x 2¼" x 16½"
2	E2 (*all)	¾" x 2¼" x 15"
2	E3	¾" x 2¼" x 13½"
4	F1	¾" x 2¼" x 27¾"
4	F2 (*all)	¾" x 2¼" x 26¼"
4	F3	¾" x 2¼" x 24¾"
4	F4	¾" x 2¼" x 2¼"
4	F5 (*all)	¾" x 2¼" x 1½"
6	G1 (*2)	¾" x 2¼" x 48"

*Indicate darker wood pieces

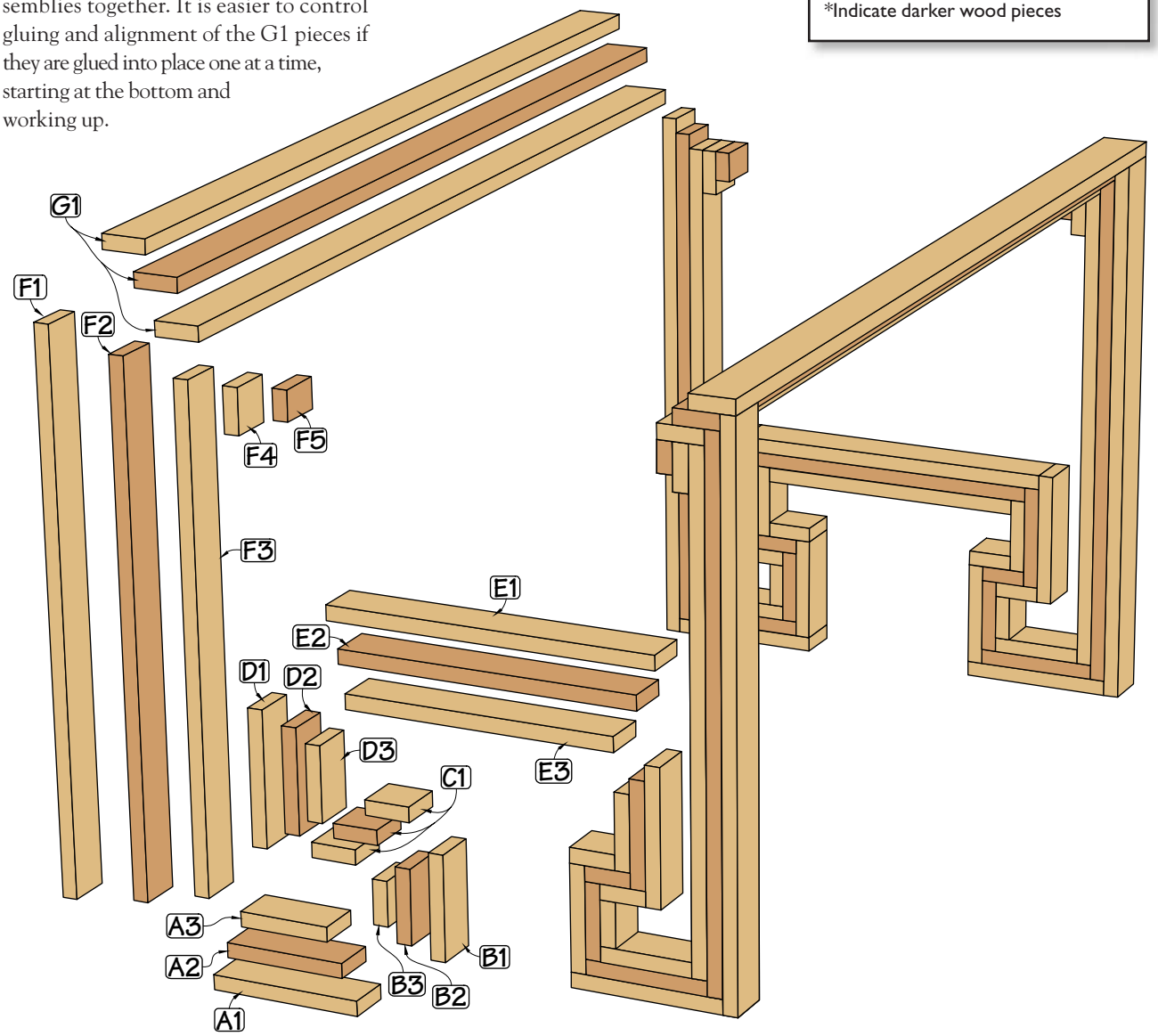

Get More Great Woodworking Resources!

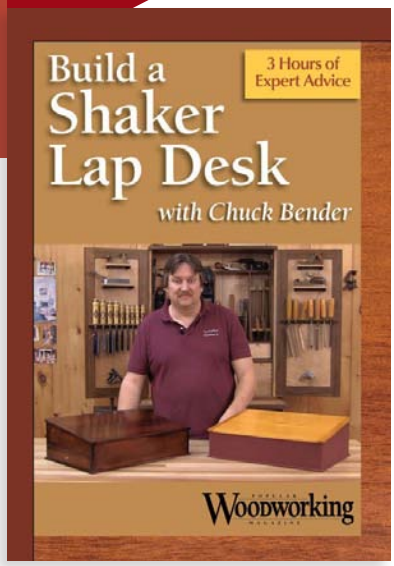

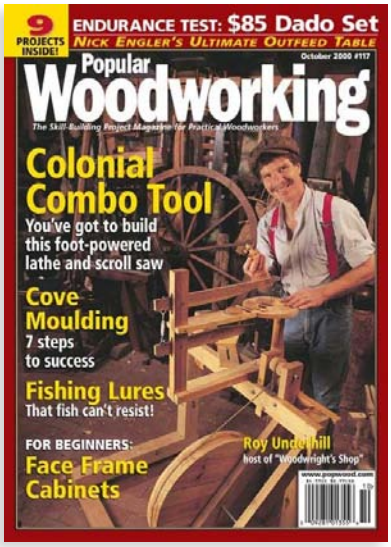

Your free download is an excerpt from the August 2001, June 2004, November 2009 and October 2000 issues of *Popular Woodworking Magazine* and is just a sample of the great projects you can find in the ShopWoodworking.com store. Buy more projects today, and continue building your knowledge!

Buy the full contents today, and continue building your knowledge!